# CERES QRLED track

AQFORM
LIGHTING SOLUTIONS

1

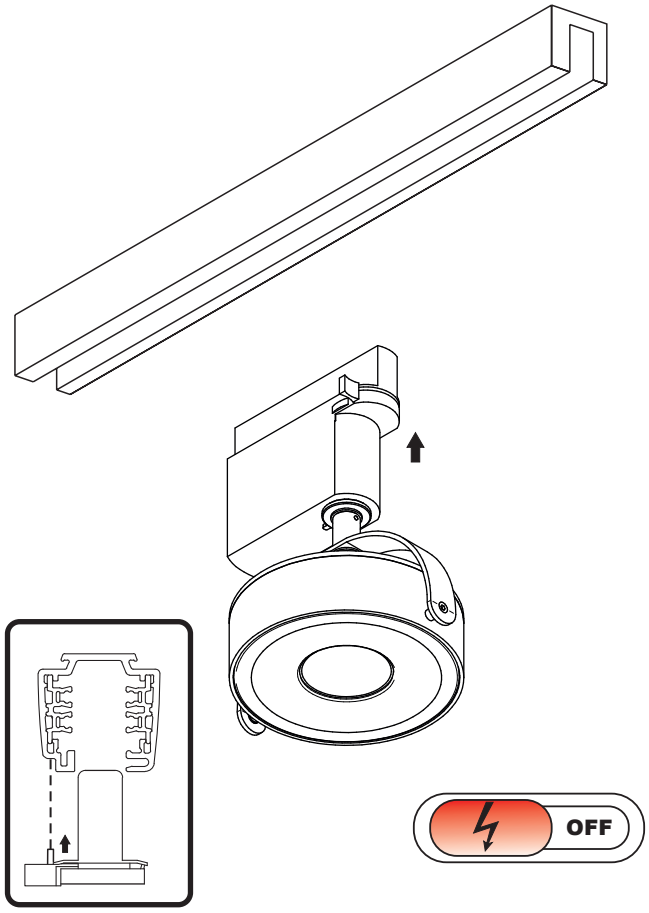


2

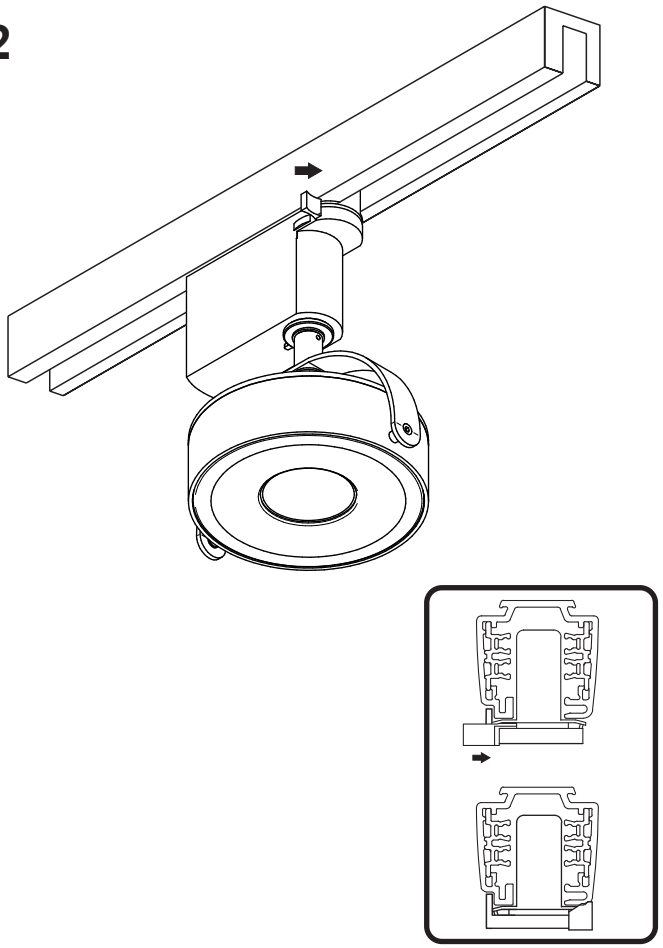

3

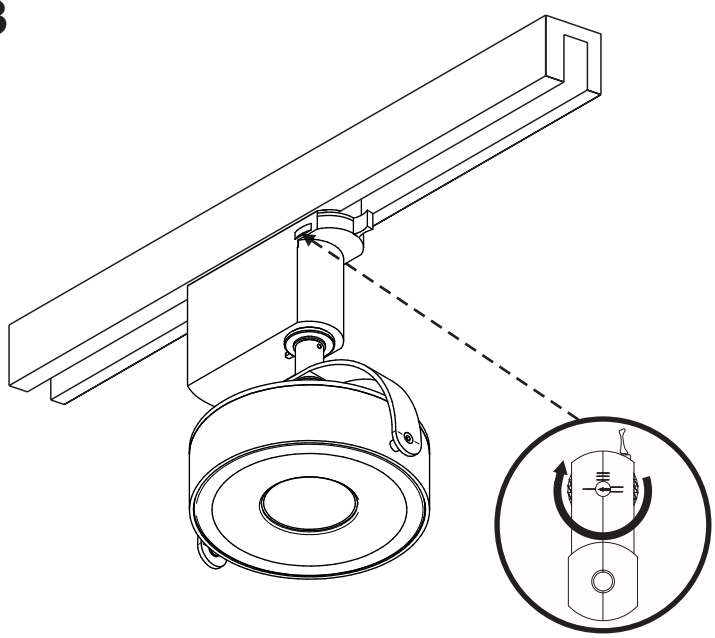

4

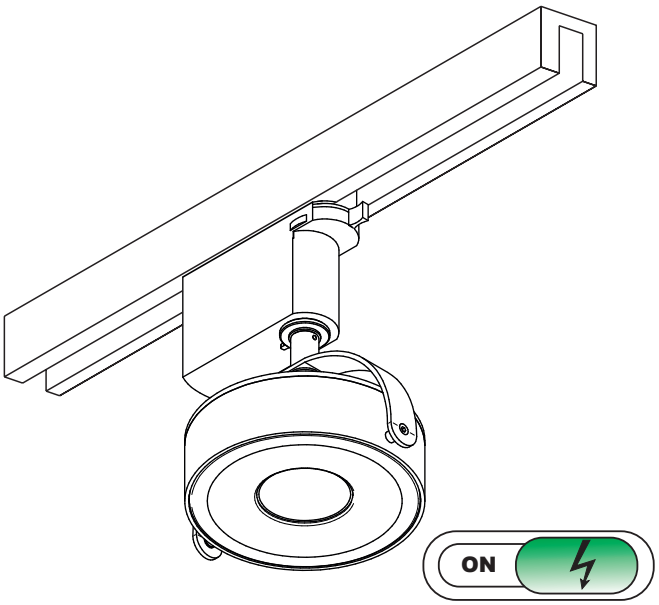


230 V

>0,2 m

LED
INT.

**AQUAFORM INC. SP. Z O.O.** 32-070 Czernichów 465, tel: +48 12 270 21 22, fax: +48 12 270 23 88, mail: biuro@aquaform.pl, www.aquaform.pl