SATELLITE LED blind recessed

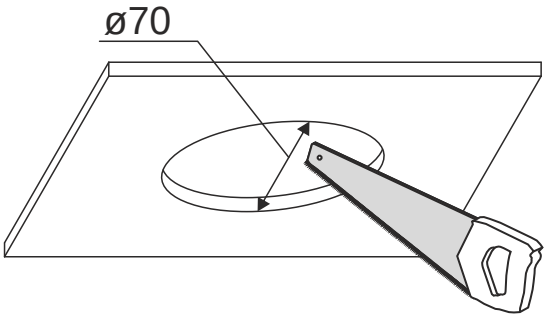

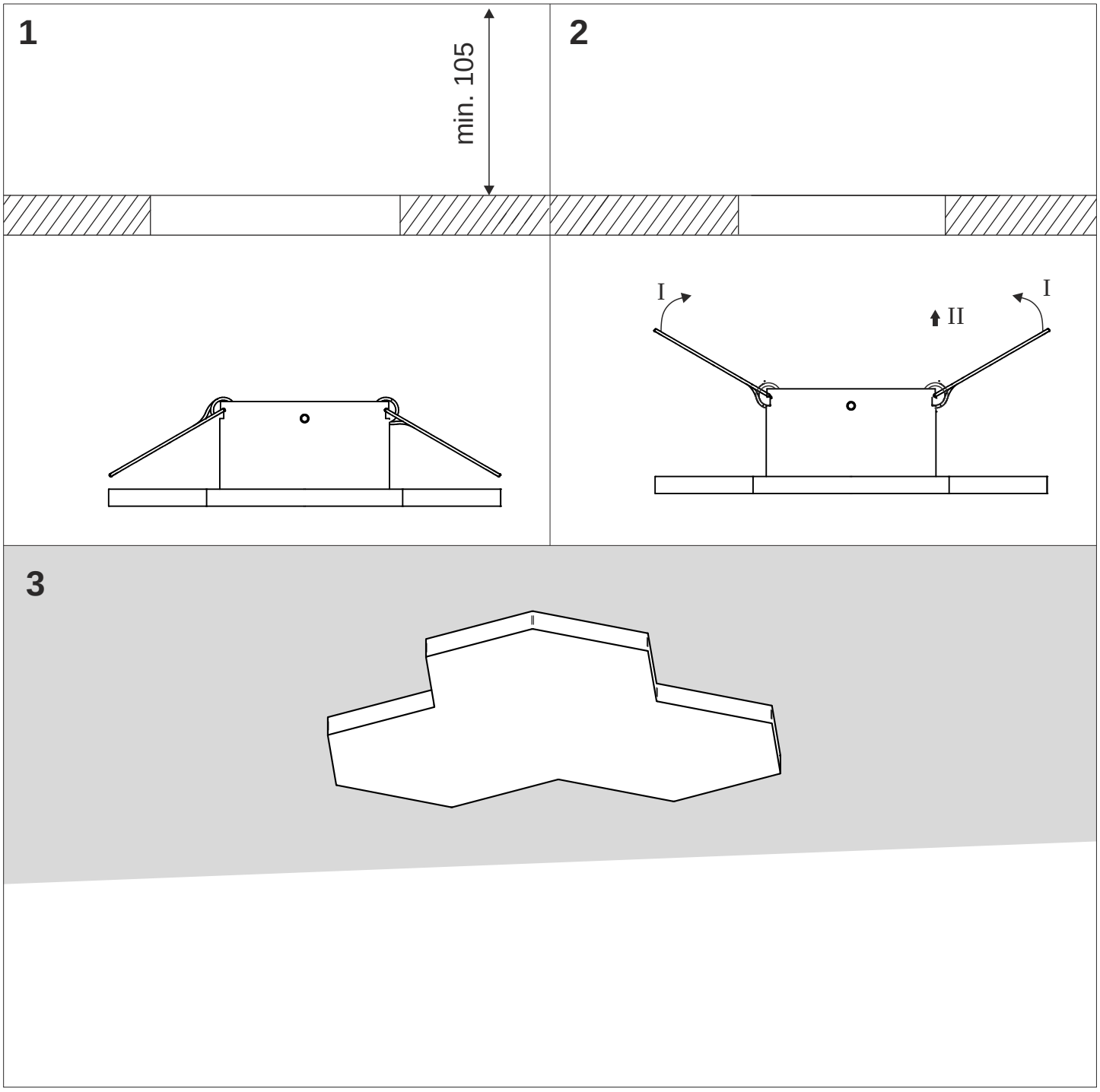

AQUAFORM Inc. sp. z o.o. ul. Przemysłowa 12-14 | 32-070 Czernichów | Poland | +48 12 270 21 22 | info@aqform.com | www.aqform.com