QUPET FINE ZWIS

QUPET FINE SUSPENDED

AQFORM LIGHTING SOLUTIONS

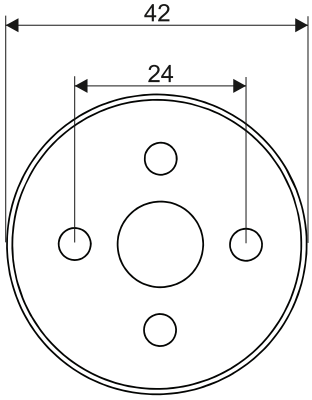

1

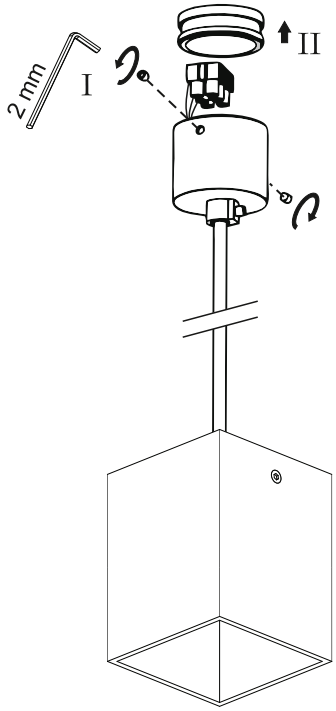

2

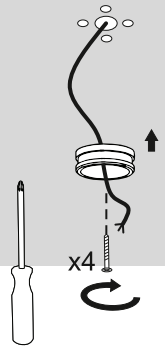

3

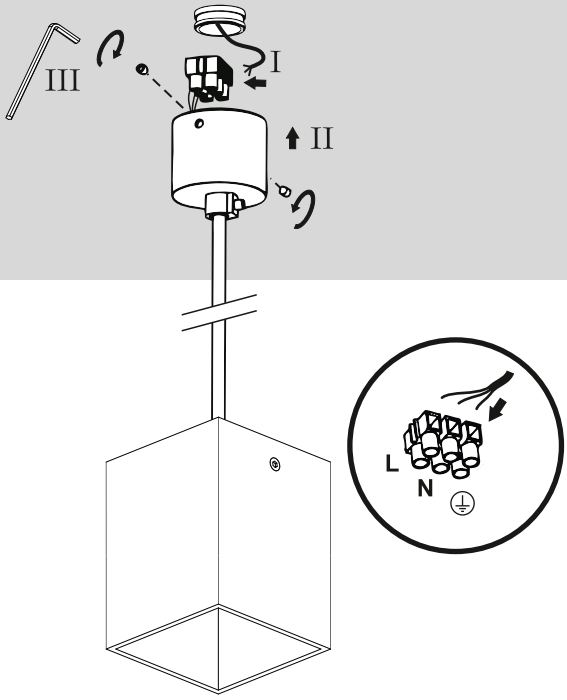

4

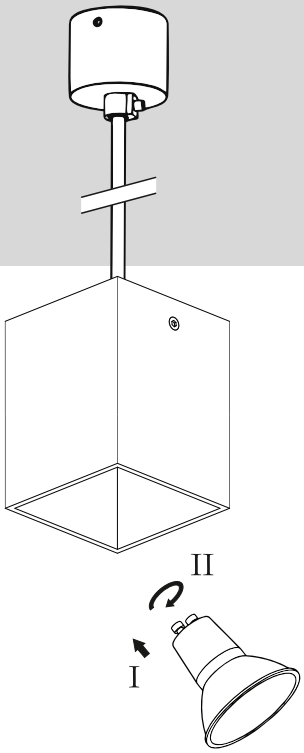

Gu10

5

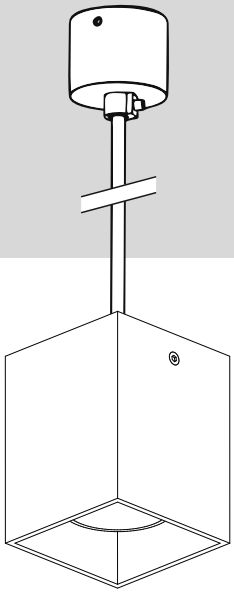

~230 V | 0,5 m | IP20 | dimmer | LED Gu10

AQUAFORM INC. SP. Z O.O. 32-070 Czernichów 465, tel: +48 12 270 21 22, fax: +48 12 270 23 88, mail: biuro@aquaform.pl, www.aquaform.pl