PET 9/17/25/50 suspended

AQFORM
LIGHTING SOLUTIONS

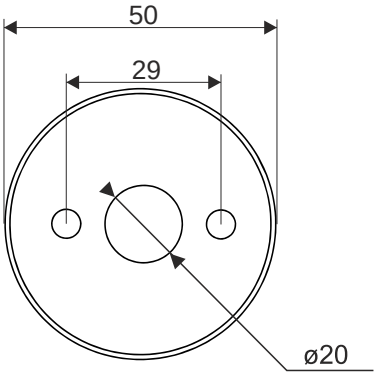

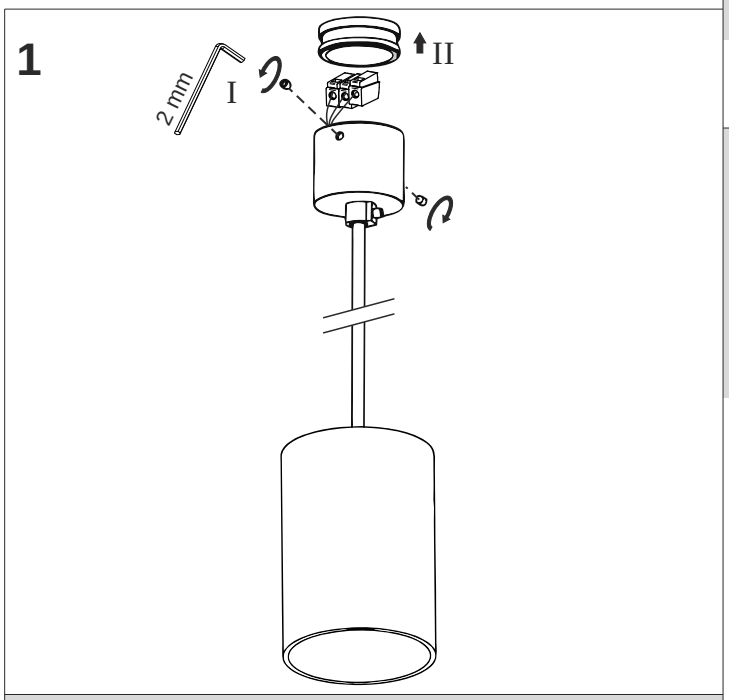

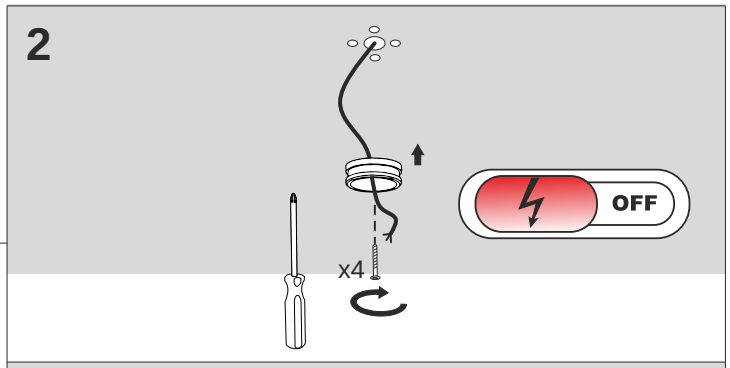

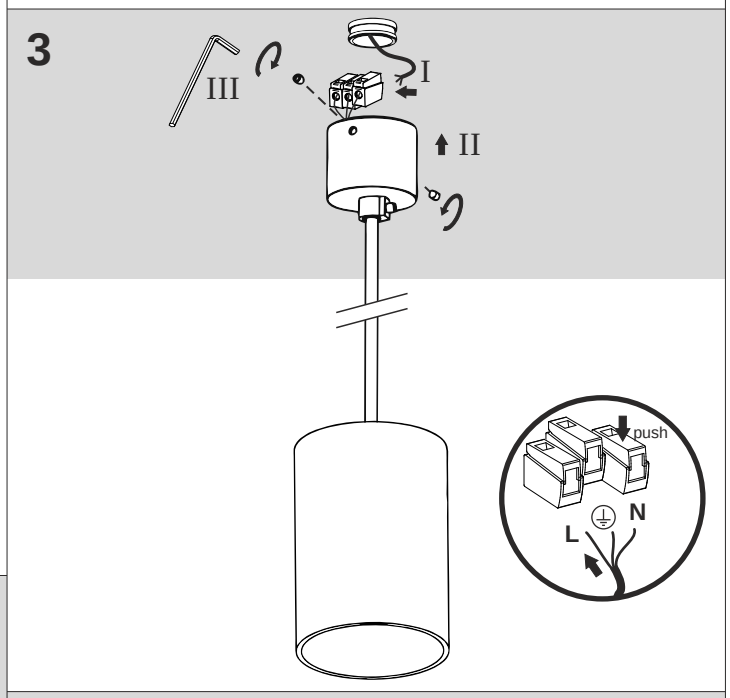

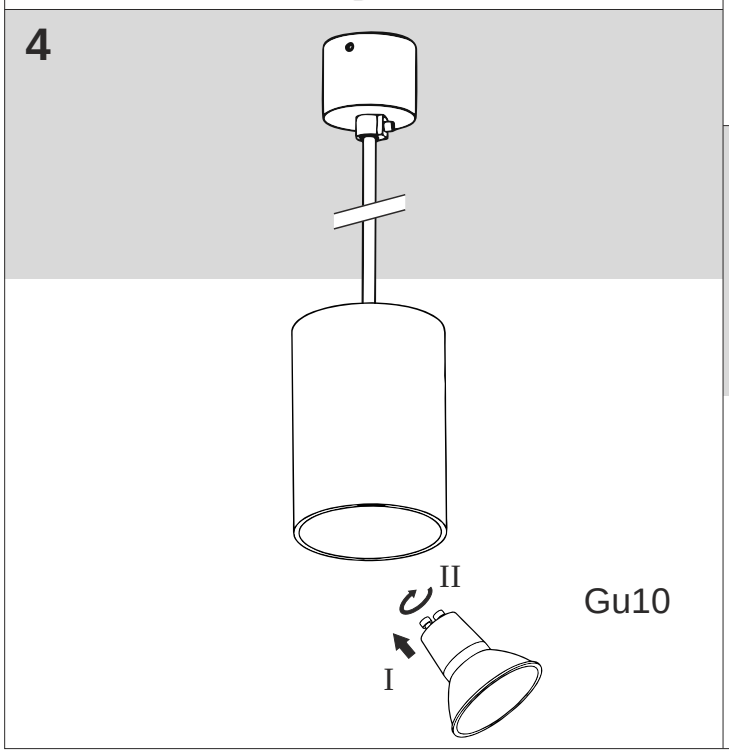

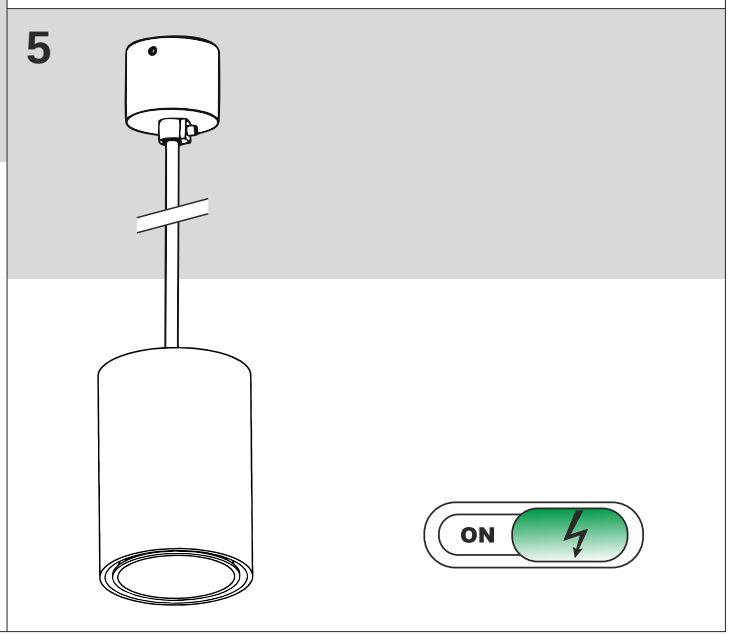

AQUAFORM Inc. sp. z o.o. ul. Przemysłowa 12-14 | 32-070 Czernichów | Poland | +48 12 270 21 22 | info@aqform.com | www.aqform.com