MAXI CUBE KINKIET LED

MAXI CUBE WALL LED

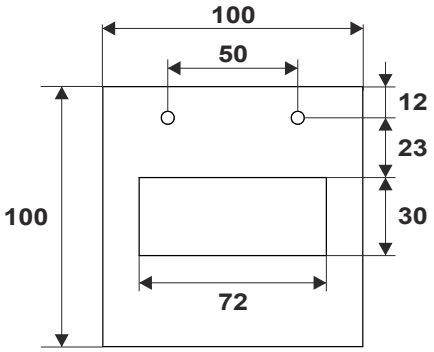

1

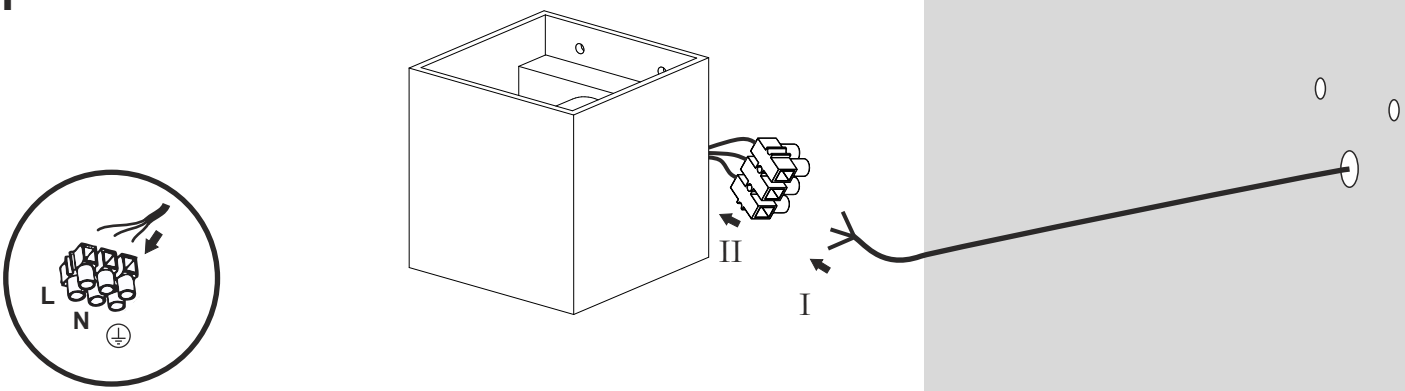

2

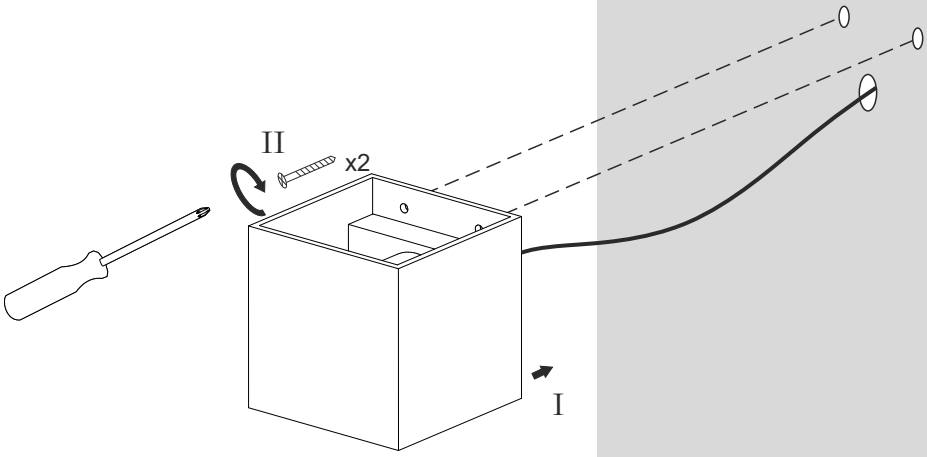

3

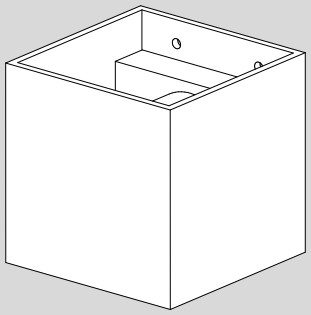

AQUAFORM INC. SP. Z O.O. 32-070 Czernichów 465, tel: +48 12 270 21 22, fax: +48 12 270 23 88, mail: biuro@aquaform.pl, www.aquaform.pl